Aqualift S Compact lift stat. Duo, GTF 1200 res., Floor slab, tileable

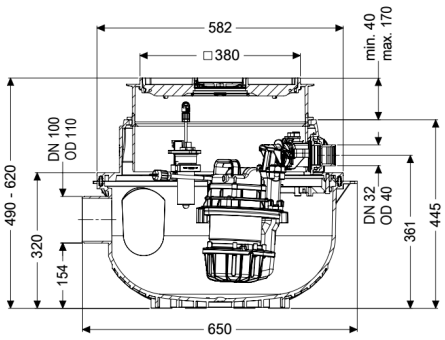

Article information

Item no.: 281230XC
GTIN: 4026092093757
Price group: 20

Advantages

- Space-saving due to installation in floor slab with integrated drainage function
- Easy retrofitting from Mono to Duo possible
- Quiet operation, as the pump installation does not cause any structure-borne sound emissions.

Description

The ready to plug in lifting station for faecal-free wastewater is equipped with one or two submersible pumps and a backflow preventer. The collection tank made of permanently resistant polymer (PE) has an open pump tank. One-handed closures enable easy removal of the integrated components. The system for installation in the floor slab is preassembled for final installation on site.

Variant	
Type of system:	duo pump
Resistant:	Resistant to saline media, wastewater from water softening systems and wastewater containing condensate from heating systems
Rim width:	Control unit
Backwater protection:	integrated
General characteristics	
Colour:	black
Standard:	EN 12050-2
Type of wastewater:	without sewage
Installation situation:	floor slab installation
Delivery state:	Installation-ready (connection parts must be connected on site)
System type:	Duo

Dimensions	
Net weight:	22,34 kg
Gross weight:	23,84 kg
Groundwater resistant from lower edge of base section:	3000 mm
Installation depth:	490 - 620 mm
Vertical adjustment:	vertically adjustable upper section
Width:	585 mm
Length:	617 mm
Packaging dimension:	width
Packaging dimension:	height
Packaging dimension:	length
Tank/drain body	
Pressure pipe connection (DN):	32
Pressure pipe connection (OD):	40 mm
Inlet nominal size (DN):	100
Pumping volume:	20 l
Tank volume:	65 l
Coverage features	
Type of cover:	tileable cover plate
Cover material:	Polymer
Colour of cover:	silver grey
Width of cover:	366 mm
Length of cover:	366 mm
Drainage function:	yes
Cover locking:	Lock & Lift
Load class:	K 3 (EN 1253-1)
Max. flooring height:	16 mm
Pumping device	
Pump control:	GTF 1200 resistant
Number of pumps:	2
Weight:	10 kg
Connection type:	coded plug
Rated current:	6,2 A
Length of mains cable for pump:	5 m
Self-diagnosis system (SDS):	I
Insulation class:	F
Protection class control unit:	IP 68 (3m)
Max. temperature (permanent) of conveyed material:	40 °C
Hot water resistance for a short time (2 min):	80 °C
Max. pumping capacity:	15,5 m^3/h
Max. pumping height:	9 m
Speed:	2650 U/min
Power P1:	1,4 kW
Power P2:	0,84 kW

Operating mode:	S1
Type of fuse required (electrical protection):	C 16 A
Type of pump connection cable:	H07RN-F 3G 1.5 mm²
Impeller type:	Multi-vane impeller
Free passage:	30 mm

Control

Motor protection switch:	yes
Alarm sensor:	optical probe
Level measurement instrument:	Immersion pipe
Type of level measurement:	pneumatic
Protection class probe:	IP 54
Mains frequency:	50 Hz
Operating voltage:	230 V
Connection type:	coded plug
Length of mains cable for control unit:	1,4 m
Potential-free contact:	optional
GSM interface:	yes
USB interface:	yes
Log book function:	yes
Multi-line display:	yes
Battery buffering:	yes
Self-diagnosis system (SDS):	yes
Max. permissible switching frequency:	Comfort
Control unit function:	With alarm message
Warning equipment version:	acoustic and optical signal